236 Quiz 4 - Take-Home

February 22, 2011 **Name** * key *

By printing my name I pledge to uphold the Honor Code.

WORK ON YOUR OWN WITH ONLY YOUR NOTEBOOK.

You are bound by the honor code to work on this quiz individually with no books, calculators, cell phones, internet, WolframAlpha, or other resources. Show your work with labeled illustrations when necessary. Your work must convince me that you did the work yourself.

1. Let R be the region bounded by the graph of $f(x) = \sqrt{x}$ and the lines $x = 0$, $x = 6$, $y = 0$, and $y = 2$. Use definite integrals to describe each of the following, but do not solve the integrals:

4 pts

a) the perimeter of R

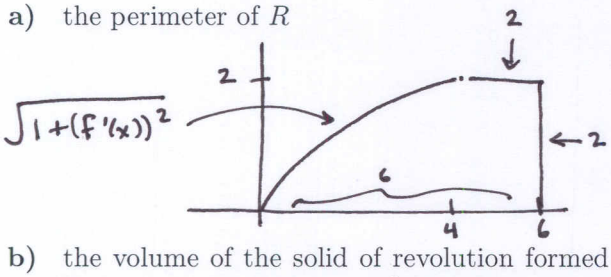

$$\boxed{10 + \int_0^4 \sqrt{1+\frac{1}{4x}}\,dx}$$

8 pts

b) the volume of the solid of revolution formed by rotating this region around the line $y = 7$, using discs and/or washers

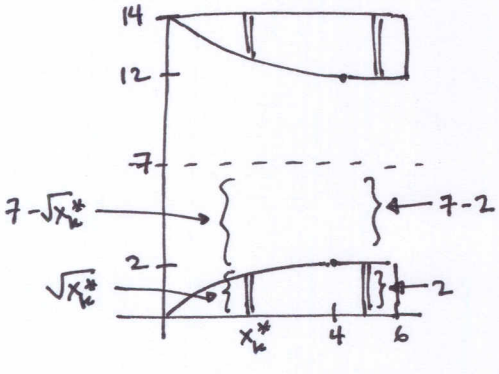

$$\boxed{\pi\int_0^4 (7^2-(7-\sqrt{x})^2)\,dx + \pi\int_4^6 (7^2-5^2)\,dx}$$

8 pts

c) the volume of the solid of revolution formed by rotating this region around the line $y = 7$, using shells

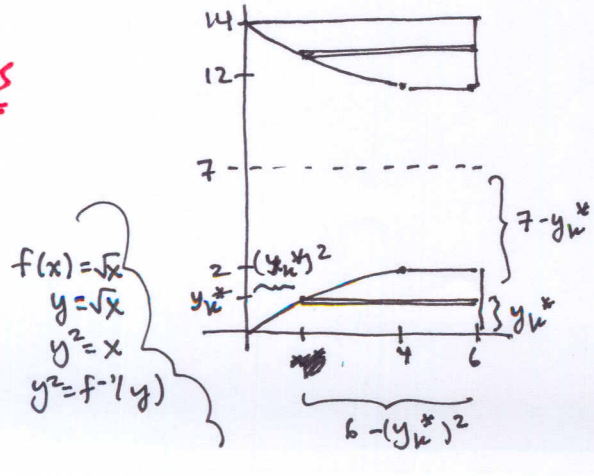

$$\boxed{2\pi\int_0^2 (7-y)(6-y^2)\,dy}$$